twiceBRIGHT

TL SERIES LED Strip Light

IGTL24 - 24VDC IN-GROUND LED STRIP

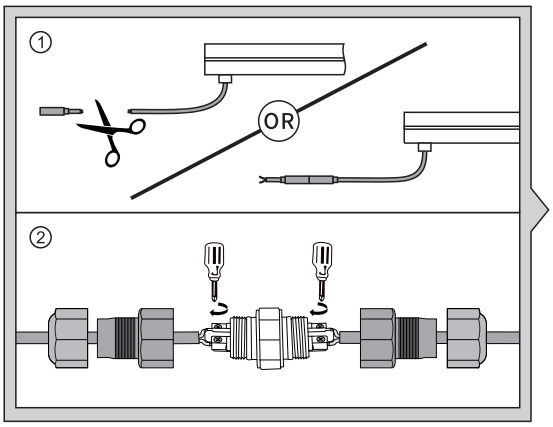

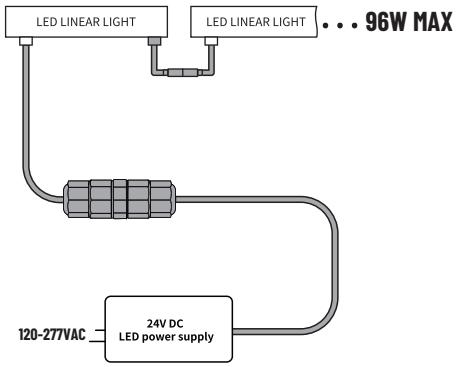

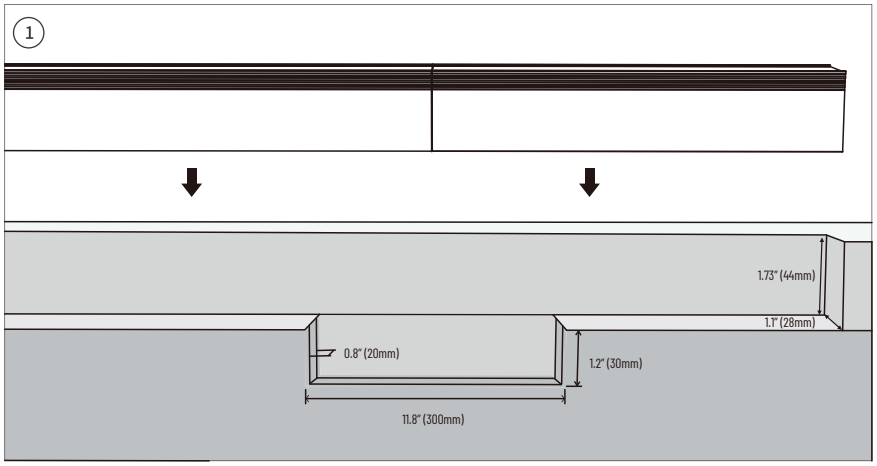

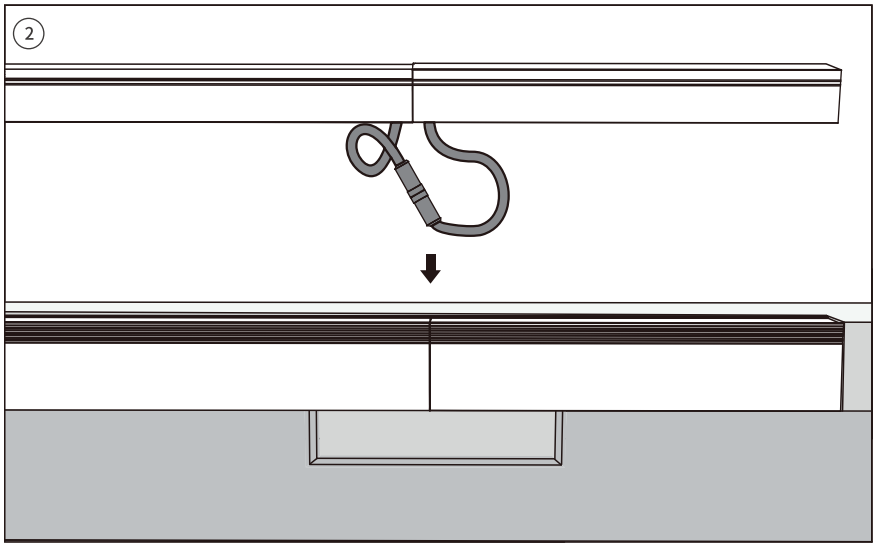

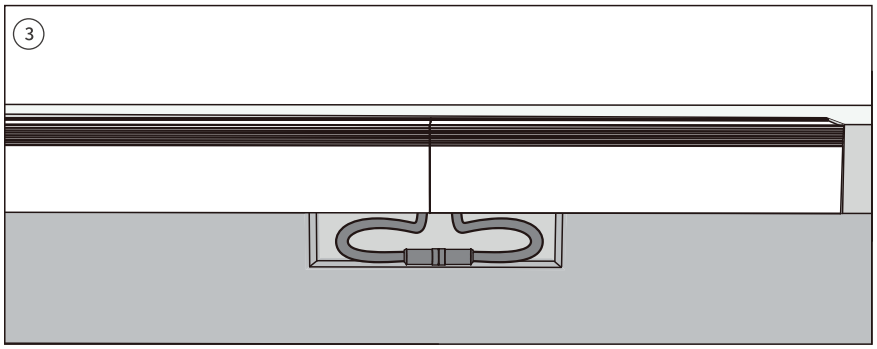

Twice Bright Lighting Co. Ltd. 223B-8257 92nd Street, Delta, BC, Canada V4G 0A4 • O 778.297.2121 • TF 1.888.484.7295 • info@twicebright.com

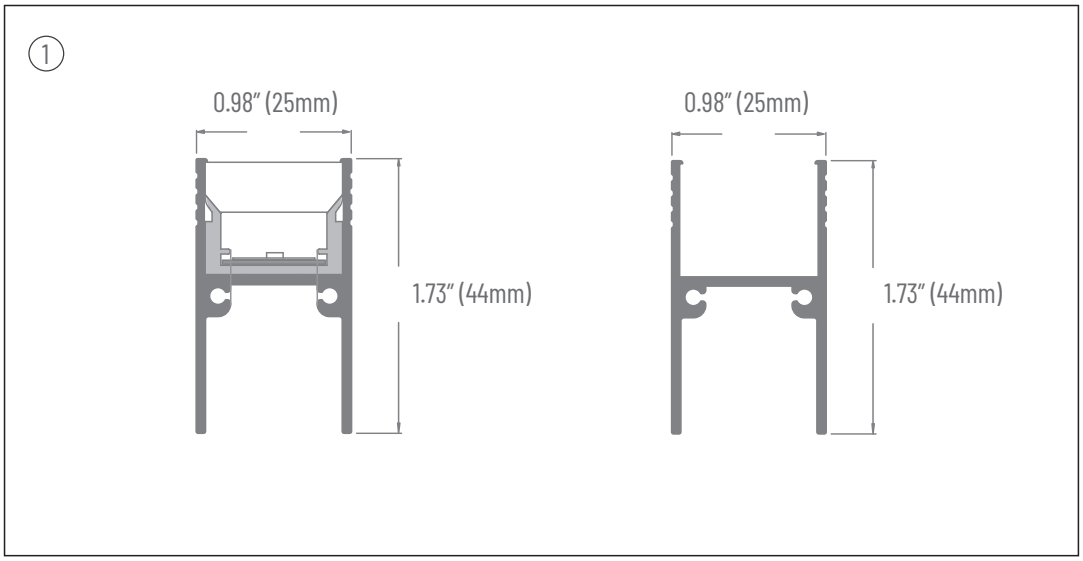
1
0.98" (25mm)
1.73" (44mm)
0.98" (25mm)
1.73" (44mm)

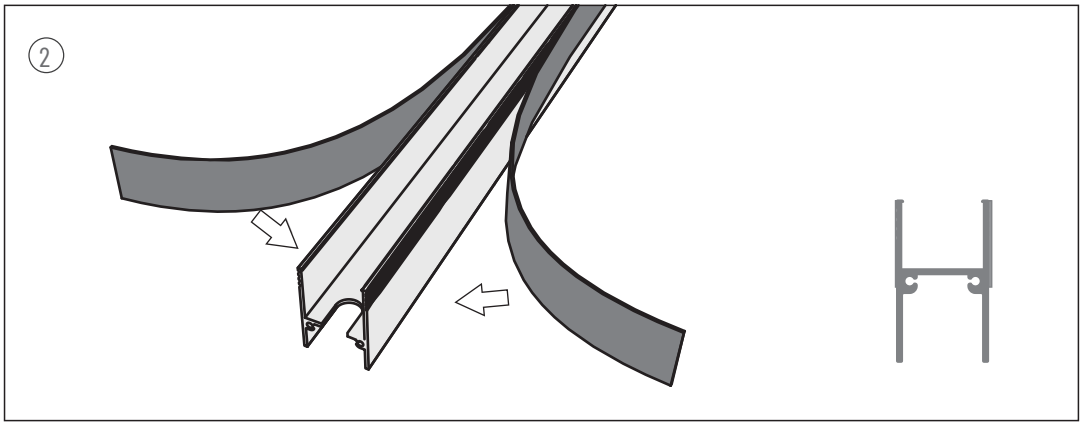
2

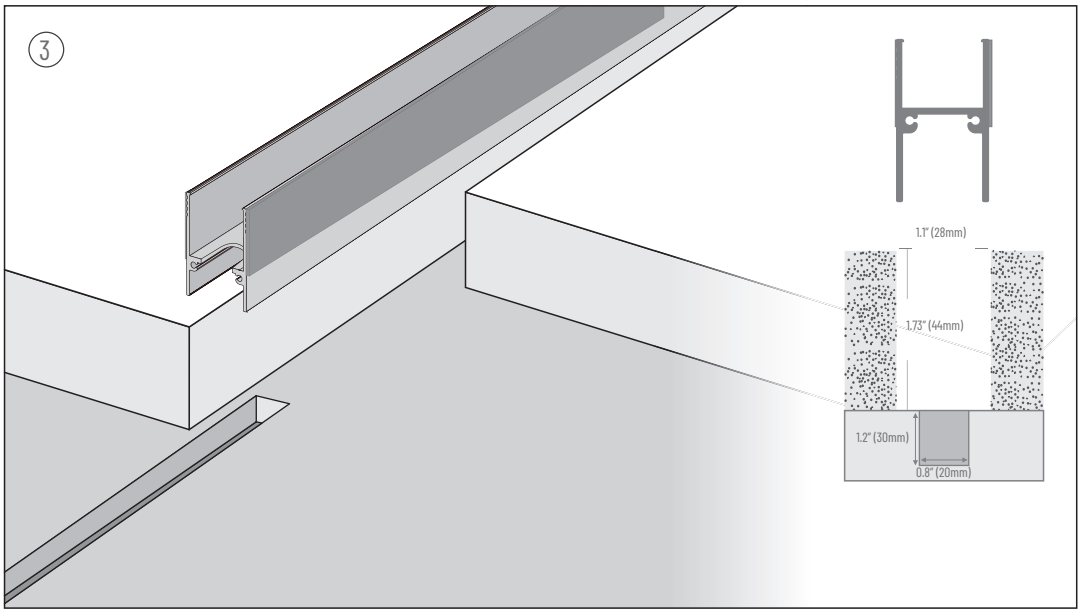
3
1.1" (28mm)
1.73" (44mm)
1.2" (30mm)
0.8" (20mm)

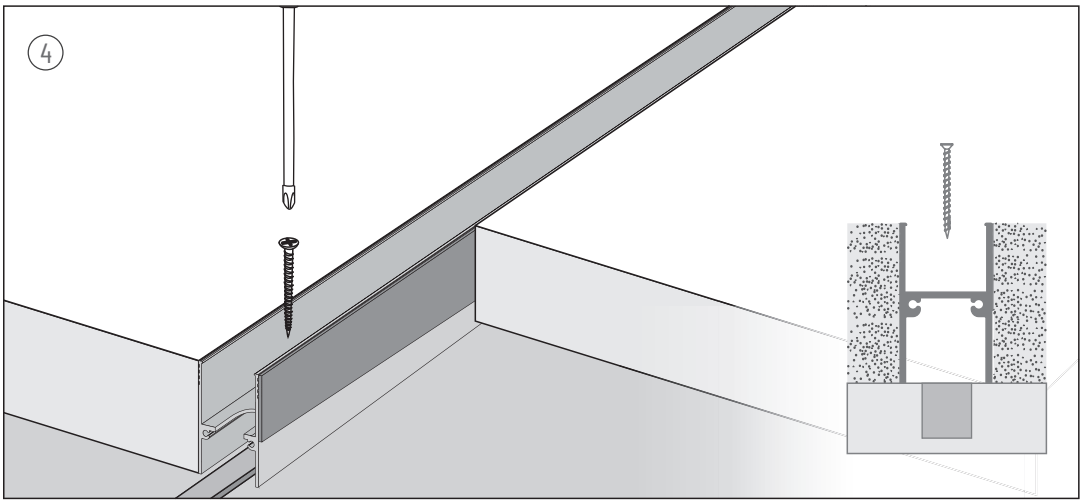
4

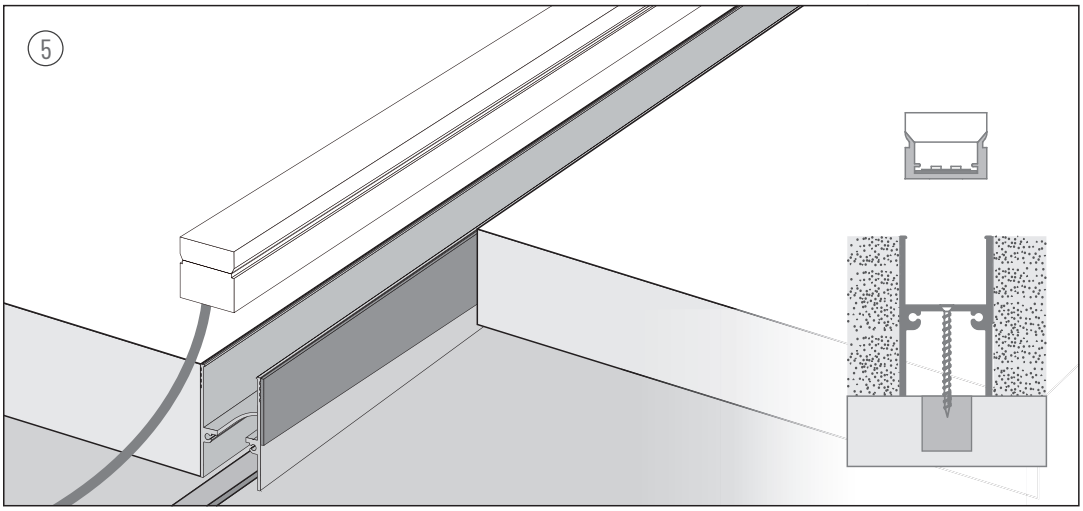
5

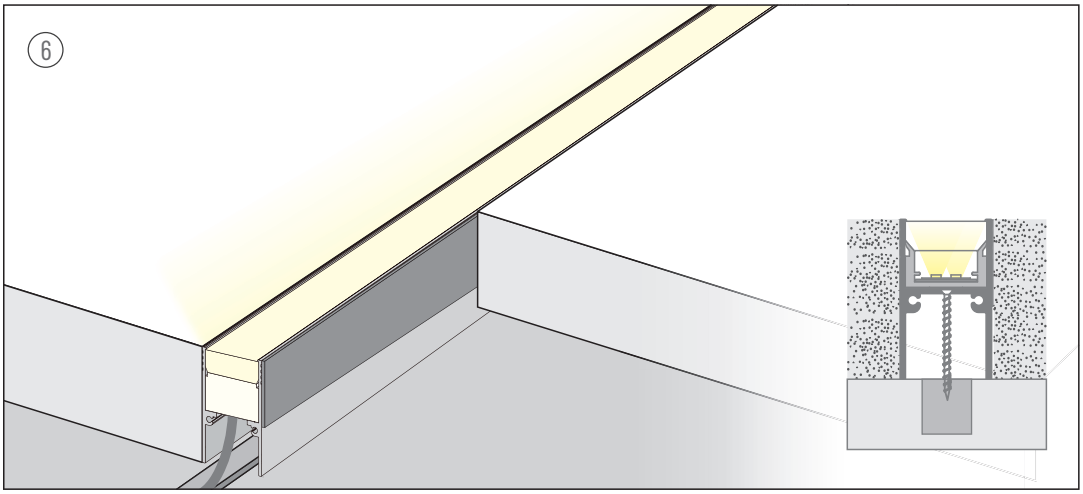
6